Verilog Code for 16-bit RISC Processor

In this Verilog project, Verilog code for a 16-bit RISC processor is presented.
The RISC processor is designed based on its instruction set and Harvard-type data path structure.
Then, the RISC processor is implemented in Verilog and verified using Xilinx ISIM.

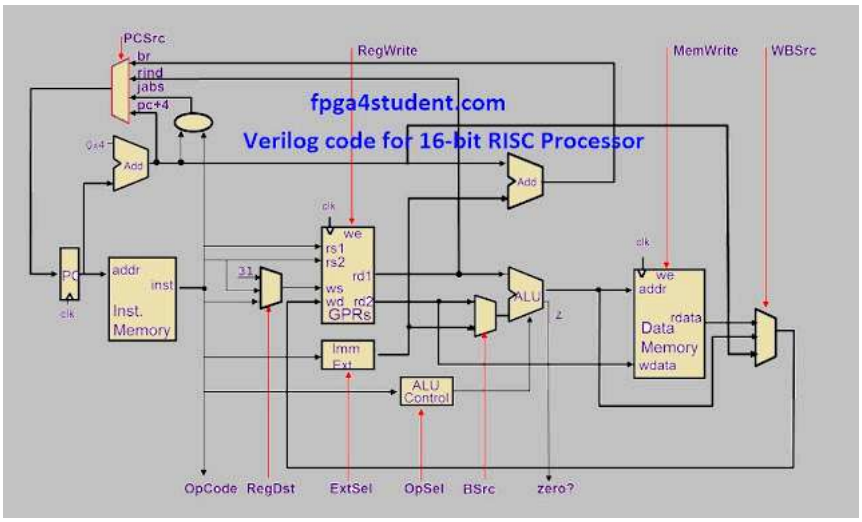

The instruction set of the RISC processor:

A. Memory Access Instructions

1. Load Word:
   LD ws, offset(rs1) ws:=Mem16[rs1 + offset]
2. Store Word:
   ST rs2, offset(rs1) Mem16[rs1 + offset]=rs2

B. Data Processing Instructions

1. Add:
   ADD ws, rs1, rs2 ws:=rs1 + rs2
2. Subtract:
   SUB ws, rs1, rs2 ws:=rs1 – rs2
3. Invert (1‘s complement):
   INV ws, rs1 ws:=!rs1
4. Logical Shift Left:
   LSL ws, rs1, rs2 ws:=rs1 << rs2
5. Logical Shift Right:
   LSR ws, rs1, rs2 ws:=rs1 >> rs2
6. Bitwise AND:
   AND ws, rs1, rs2 ws:=rs1 • rs2
7. Bitwise OR:
   OR ws, rs1, rs2 ws:=rs1 | rs2
8. Set on Less Than:
   SLT ws, rs1, rs2 ws:=1 if rs1 < rs2; ws:=0 if rs1 ≥ rs2

C. Control Flow Instructions

1. Branch on Equal:
   BEQ rs1, rs2, offset
   Branch to (PC + 2 + (offset << 1)) when rs1 = rs2
2. Branch on Not Equal:
   BNE rs1, rs2, offset
   Branch to (PC + 2 + (offset << 1)) when rs1 != rs2
3. Jump: JMP offset Jump to {PC [15:13], (offset << 1)}

Instruction Format of the RISC processor :

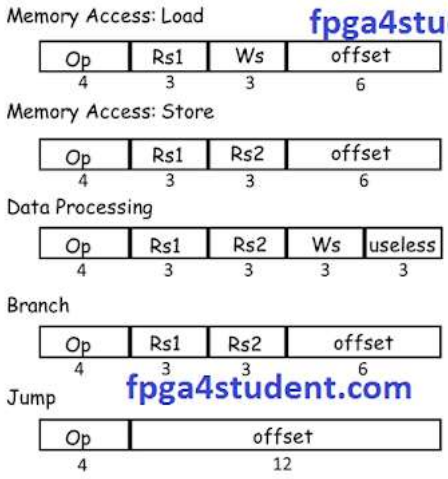

fpga4student.com

OP	
0000	Load Word
0001	Store Word
0002	Add
0003	Subtract
0004	Invert (1's complement)
0005	Logical Shift Left
0006	Logical Shift Right
0007	Bitwise AND
0008	Bitwise OR
0009	Set on Less Than
0010	Hamming Distance
0011	Branch on Equal
0012	Branch on Not Equal
0013	Jump

Processor Control Unit Design:

Control signals									
Instruction	Reg Dst	ALU Src	Memto Reg	Reg Write	Mem Read	Mem Write	Branch	ALUOp	Jump
Data-processing	1	0	0	1	0	0	0	00	0
LW	0	1	1	1	1	0	0	10	0
SW	0	1	0	0	0	1	0	10	0
BEQ,BNE	0	0	0	0	0	0	1	01	0
J	0	0	0	0	0	0	0	00	1

ALU Control Unit Design:

ALU Control				
ALUOp	Opcode(hex)	ALUcnt	ALU Operation	Instruction
10	xxxx	000	ADD	LW,SW
01	xxxx	001	SUB	BEQ,BNE
00	0002	000	ADD	D-type: ADD
00	0003	001	SUB	D-type: SUB
00	0004	010	INVERT	D-type: INVERT
00	0005	011	LSL	D-type: LSL
00	0006	100	LSR	D-type: LSR
00	0007	101	AND	D-type: AND
00	0008	110	OR	D-type: OR
00	0009	111	SLT	D-type: SLT

Verilog code for the RISC processor:

1. Verilog code for Instruction Memory :

```
`include "Parameter.v"
// fpga4student.com
// FPGA projects, VHDL projects, Verilog projects
// Verilog code for RISC Processor
// Verilog code for Instruction Memory
module Instruction_Memory(
 input[15:0] pc,
 output[15:0] instruction
);

 reg [`col - 1:0] memory [`row_i - 1:0];
 wire [3 : 0] rom_addr = pc[4 : 1];
 initial
 begin
  $readmemb("./test/test.prog", memory,0,14);
 end
 assign instruction =  memory[rom_addr];

endmodule
```

2. Verilog code for register file:

```
`timescale 1ns / 1ps
// fpga4student.com
// FPGA projects, VHDL projects, Verilog projects
// Verilog code for RISC Processor
// Verilog code for register file
module GPRs(
 input    clk,
 // write port
 input    reg_write_en,
 input  [2:0] reg_write_dest,
 input  [15:0] reg_write_data,
 //read port 1
 input  [2:0] reg_read_addr_1,
 output  [15:0] reg_read_data_1,
 //read port 2
 input  [2:0] reg_read_addr_2,
 output  [15:0] reg_read_data_2
);
 reg [15:0] reg_array [7:0];
 integer i;
 // write port
 //reg [2:0] i;
 initial begin
  for(i=0;i<8;i=i+1)
   reg_array[i] <= 16'd0;
 end
 always @ (posedge clk ) begin
   if(reg_write_en) begin
    reg_array[reg_write_dest] <= reg_write_data;
   end
 end


 assign reg_read_data_1 = reg_array[reg_read_addr_1];
 assign reg_read_data_2 = reg_array[reg_read_addr_2];


endmodule
```

3. Verilog code for Data Memory:

```
`include "Parameter.v"
// fpga4student.com
// FPGA projects, VHDL projects, Verilog projects
// Verilog code for RISC Processor
// Verilog code for data Memory
module Data_Memory(
 input clk,
 // address input, shared by read and write port
 input [15:0]   mem_access_addr,

 // write port
 input [15:0]   mem_write_data,
 input     mem_write_en,
 input mem_read,
 // read port
 output [15:0]   mem_read_data
);

reg [`col - 1:0] memory [`row_d - 1:0];
integer f;
wire [2:0] ram_addr=mem_access_addr[2:0];
initial
 begin
  $readmemb("./test/test.data", memory);

  f = $fopen(`filename);
  $fmonitor(f, "time = %d\n", $time,
  "\tmemory[0] = %b\n", memory[0],
  "\tmemory[1] = %b\n", memory[1],
  "\tmemory[2] = %b\n", memory[2],
  "\tmemory[3] = %b\n", memory[3],
  "\tmemory[4] = %b\n", memory[4],
  "\tmemory[5] = %b\n", memory[5],
  "\tmemory[6] = %b\n", memory[6],
  "\tmemory[7] = %b\n", memory[7]);
  `simulation_time;
  $fclose(f);
 end

 always @(posedge clk) begin
  if (mem_write_en)
   memory[ram_addr] <= mem_write_data;
 end
 assign mem_read_data = (mem_read==1'b1) ? memory[ram_addr]: 16'd0;

endmodule
```

4. Verilog code for ALU unit:

```
// fpga4student.com
// FPGA projects, VHDL projects, Verilog projects
// Verilog code for RISC Processor
// Verilog code for ALU
module ALU(
 input  [15:0] a,  //src1
 input  [15:0] b,  //src2
 input  [2:0] alu_control, //function sel

 output reg [15:0] result,  //result
 output zero
    );

always @(*)
```

```
begin
 case(alu_control)
 3'b000: result = a + b; // add
 3'b001: result = a - b; // sub
 3'b010: result = ~a;
 3'b011: result = a<<b;
 3'b100: result = a>>b;
 3'b101: result = a & b; // and
 3'b110: result = a | b; // or
 3'b111: begin if (a<b) result = 16'd1;
    else result = 16'd0;
    end
 default:result = a + b; // add
 endcase
end
assign zero = (result==16'd0) ? 1'b1: 1'b0;

endmodule
```

5. Verilog code for ALU Control Unit of the RISC processor:

```
`timescale 1ns / 1ps
//fpga4student.com: FPGA projects, Verilog projects, VHDL projects
// Verilog code for 16-bit RISC processor
// ALU_Control Verilog code
module alu_control( ALU_Cnt, ALUOp, Opcode);
 output reg[2:0] ALU_Cnt;
 input [1:0] ALUOp;
 input [3:0] Opcode;
 wire [5:0] ALUControlIn;
 assign ALUControlIn = {ALUOp,Opcode};
 always @(ALUControlIn)
 casex (ALUControlIn)
   6'b10xxxx: ALU_Cnt=3'b000;
   6'b01xxxx: ALU_Cnt=3'b001;
   6'b000010: ALU_Cnt=3'b000;
   6'b000011: ALU_Cnt=3'b001;
   6'b000100: ALU_Cnt=3'b010;
   6'b000101: ALU_Cnt=3'b011;
   6'b000110: ALU_Cnt=3'b100;
   6'b000111: ALU_Cnt=3'b101;
   6'b001000: ALU_Cnt=3'b110;
   6'b001001: ALU_Cnt=3'b111;
  default: ALU_Cnt=3'b000;
  endcase
endmodule
```

6. Verilog code for Datapath of the RISC processor:

```
`timescale 1ns / 1ps
// fpga4student.com
// FPGA projects, VHDL projects, Verilog projects
// Verilog code for RISC Processor
// Verilog code for Data Path of the processor
module Datapath_Unit(
 input clk,
 input jump,beq,mem_read,mem_write,alu_src,reg_dst,mem_to_reg,reg_write,bne,
 input[1:0] alu_op,
 output[3:0] opcode
);
 reg  [15:0] pc_current;
 wire [15:0] pc_next,pc2;
 wire [15:0] instr;
 wire [2:0] reg_write_dest;
 wire [15:0] reg_write_data;
```

```
wire [2:0] reg_read_addr_1;
wire [15:0] reg_read_data_1;
wire [2:0] reg_read_addr_2;
wire [15:0] reg_read_data_2;
wire [15:0] ext_im,read_data2;
wire [2:0] ALU_Control;
wire [15:0] ALU_out;
wire zero_flag;
wire [15:0] PC_j, PC_beq, PC_2beq,PC_2bne,PC_bne;
wire beq_control;
wire [12:0] jump_shift;
wire [15:0] mem_read_data;
// PC
initial begin
 pc_current <= 16'd0;
end
always @(posedge clk)
begin
  pc_current <= pc_next;
end
assign pc2 = pc_current + 16'd2;
// instruction memory
Instruction_Memory im(.pc(pc_current),.instruction(instr));
// jump shift left 2
assign jump_shift = {instr[11:0],1'b0};
// multiplexer regdest
assign reg_write_dest = (reg_dst==1'b1) ? instr[5:3] :instr[8:6];
// register file
assign reg_read_addr_1 = instr[11:9];
assign reg_read_addr_2 = instr[8:6];

// GENERAL PURPOSE REGISTERs
GPRs reg_file
(
 .clk(clk),
 .reg_write_en(reg_write),
 .reg_write_dest(reg_write_dest),
 .reg_write_data(reg_write_data),
 .reg_read_addr_1(reg_read_addr_1),
 .reg_read_data_1(reg_read_data_1),
 .reg_read_addr_2(reg_read_addr_2),
 .reg_read_data_2(reg_read_data_2)
);
// immediate extend
assign ext_im = {{10{instr[5]}},instr[5:0]};
// ALU control unit
alu_control ALU_Control_unit(.ALUOp(alu_op),.Opcode(instr[15:12]),.ALU_Cnt(ALU_Co
// multiplexer alu_src
assign read_data2 = (alu_src==1'b1) ? ext_im : reg_read_data_2;
// ALU
ALU alu_unit(.a(reg_read_data_1),.b(read_data2),.alu_control(ALU_Control),.result
// PC beq add
assign PC_beq = pc2 + {ext_im[14:0],1'b0};
assign PC_bne = pc2 + {ext_im[14:0],1'b0};
// beq control
assign beq_control = beq & zero_flag;
assign bne_control = bne & (~zero_flag);
// PC_beq
assign PC_2beq = (beq_control==1'b1) ? PC_beq : pc2;
// PC_bne
assign PC_2bne = (bne_control==1'b1) ? PC_bne : PC_2beq;
// PC_j
assign PC_j = {pc2[15:13],jump_shift};
```

```
 // PC_next
 assign pc_next = (jump == 1'b1) ? PC_j :  PC_2bne;

 /// Data memory
  Data_Memory dm
   (
    .clk(clk),
    .mem_access_addr(ALU_out),
    .mem_write_data(reg_read_data_2),
    .mem_write_en(mem_write),
    .mem_read(mem_read),
    .mem_read_data(mem_read_data)
   );

 // write back
 assign reg_write_data = (mem_to_reg == 1'b1)?  mem_read_data: ALU_out;
 // output to control unit
 assign opcode = instr[15:12];
endmodule
```

7. Verilog code for the Control Unit of the RISC processor:

```
`timescale 1ns / 1ps
// fpga4student.com
// FPGA projects, VHDL projects, Verilog projects
// Verilog code for RISC Processor
// Verilog code for Control Unit
module Control_Unit(
      input[3:0] opcode,
      output reg[1:0] alu_op,
      output reg jump,beq,bne,mem_read,mem_write,alu_src,reg_dst,mem_to_reg,reg_wr
    );


always @(*)
begin
 case(opcode)
 4'b0000:  // LW
   begin
    reg_dst = 1'b0;
    alu_src = 1'b1;
    mem_to_reg = 1'b1;
    reg_write = 1'b1;
    mem_read = 1'b1;
    mem_write = 1'b0;
    beq = 1'b0;
    bne = 1'b0;
    alu_op = 2'b10;
    jump = 1'b0;
   end
 4'b0001:  // SW
   begin
    reg_dst = 1'b0;
    alu_src = 1'b1;
    mem_to_reg = 1'b0;
    reg_write = 1'b0;
    mem_read = 1'b0;
    mem_write = 1'b1;
    beq = 1'b0;
    bne = 1'b0;
    alu_op = 2'b10;
    jump = 1'b0;
   end
 4'b0010:  // data_processing
```

```
    begin
     reg_dst = 1'b1;
     alu_src = 1'b0;
     mem_to_reg = 1'b0;
     reg_write = 1'b1;
     mem_read = 1'b0;
     mem_write = 1'b0;
     beq = 1'b0;
     bne = 1'b0;
     alu_op = 2'b00;
     jump = 1'b0;
    end
  4'b0011:  // data_processing
    begin
     reg_dst = 1'b1;
     alu_src = 1'b0;
     mem_to_reg = 1'b0;
     reg_write = 1'b1;
     mem_read = 1'b0;
     mem_write = 1'b0;
     beq = 1'b0;
     bne = 1'b0;
     alu_op = 2'b00;
     jump = 1'b0;
    end
  4'b0100:  // data_processing
    begin
     reg_dst = 1'b1;
     alu_src = 1'b0;
     mem_to_reg = 1'b0;
     reg_write = 1'b1;
     mem_read = 1'b0;
     mem_write = 1'b0;
     beq = 1'b0;
     bne = 1'b0;
     alu_op = 2'b00;
     jump = 1'b0;
    end
  4'b0101:  // data_processing
    begin
     reg_dst = 1'b1;
     alu_src = 1'b0;
     mem_to_reg = 1'b0;
     reg_write = 1'b1;
     mem_read = 1'b0;
     mem_write = 1'b0;
     beq = 1'b0;
     bne = 1'b0;
     alu_op = 2'b00;
     jump = 1'b0;
    end
  4'b0110:  // data_processing
    begin
     reg_dst = 1'b1;
     alu_src = 1'b0;
     mem_to_reg = 1'b0;
     reg_write = 1'b1;
     mem_read = 1'b0;
     mem_write = 1'b0;
     beq = 1'b0;
     bne = 1'b0;
     alu_op = 2'b00;
     jump = 1'b0;
```

```
    end
  4'b0111:  // data_processing
    begin
     reg_dst = 1'b1;
     alu_src = 1'b0;
     mem_to_reg = 1'b0;
     reg_write = 1'b1;
     mem_read = 1'b0;
     mem_write = 1'b0;
     beq = 1'b0;
     bne = 1'b0;
     alu_op = 2'b00;
     jump = 1'b0;
    end
  4'b1000:  // data_processing
    begin
     reg_dst = 1'b1;
     alu_src = 1'b0;
     mem_to_reg = 1'b0;
     reg_write = 1'b1;
     mem_read = 1'b0;
     mem_write = 1'b0;
     beq = 1'b0;
     bne = 1'b0;
     alu_op = 2'b00;
     jump = 1'b0;
    end
  4'b1001:  // data_processing
    begin
     reg_dst = 1'b1;
     alu_src = 1'b0;
     mem_to_reg = 1'b0;
     reg_write = 1'b1;
     mem_read = 1'b0;
     mem_write = 1'b0;
     beq = 1'b0;
     bne = 1'b0;
     alu_op = 2'b00;
     jump = 1'b0;
    end
  4'b1011:  // BEQ
    begin
     reg_dst = 1'b0;
     alu_src = 1'b0;
     mem_to_reg = 1'b0;
     reg_write = 1'b0;
     mem_read = 1'b0;
     mem_write = 1'b0;
     beq = 1'b1;
     bne = 1'b0;
     alu_op = 2'b01;
     jump = 1'b0;
    end
  4'b1100:  // BNE
    begin
     reg_dst = 1'b0;
     alu_src = 1'b0;
     mem_to_reg = 1'b0;
     reg_write = 1'b0;
     mem_read = 1'b0;
     mem_write = 1'b0;
     beq = 1'b0;
     bne = 1'b1;
```

```
    alu_op = 2'b01;
    jump = 1'b0;
   end
 4'b1101:  // J
   begin
    reg_dst = 1'b0;
    alu_src = 1'b0;
    mem_to_reg = 1'b0;
    reg_write = 1'b0;
    mem_read = 1'b0;
    mem_write = 1'b0;
    beq = 1'b0;
    bne = 1'b0;
    alu_op = 2'b00;
    jump = 1'b1;
   end
 default: begin
    reg_dst = 1'b1;
    alu_src = 1'b0;
    mem_to_reg = 1'b0;
    reg_write = 1'b1;
    mem_read = 1'b0;
    mem_write = 1'b0;
    beq = 1'b0;
    bne = 1'b0;
    alu_op = 2'b00;
    jump = 1'b0;
   end
 endcase
 end

endmodule
```

8. Verilog code for the 16-bit RISC processor:

```
`timescale 1ns / 1ps
// fpga4student.com
// FPGA projects, VHDL projects, Verilog projects
// Verilog code for RISC Processor

module Risc_16_bit(
 input clk
);
 wire jump,bne,beq,mem_read,mem_write,alu_src,reg_dst,mem_to_reg,reg_write;
 wire[1:0] alu_op;
 wire [3:0] opcode;
 // Datapath
 Datapath_Unit DU
 (
  .clk(clk),
  .jump(jump),
  .beq(beq),
  .mem_read(mem_read),
  .mem_write(mem_write),
  .alu_src(alu_src),
  .reg_dst(reg_dst),
  .mem_to_reg(mem_to_reg),
  .reg_write(reg_write),
  .bne(bne),
  .alu_op(alu_op),
  .opcode(opcode)
 );
 // control unit
 Control_Unit control
```

```
 (
  .opcode(opcode),
  .reg_dst(reg_dst),
  .mem_to_reg(mem_to_reg),
  .alu_op(alu_op),
  .jump(jump),
  .bne(bne),
  .beq(beq),
  .mem_read(mem_read),
  .mem_write(mem_write),
  .alu_src(alu_src),
  .reg_write(reg_write)
 );

endmodule
```

9. Verilog Testbench code for the 16-bit RISC Processor:

```
`timescale 1ns / 1ps
`include "Parameter.v"
// fpga4student.com
// FPGA projects, VHDL projects, Verilog projects
// Verilog code for RISC Processor
// Verilog testbench code to test the processor
module test_Risc_16_bit;

 // Inputs
 reg clk;

 // Instantiate the Unit Under Test (UUT)
 Risc_16_bit uut (
  .clk(clk)
 );

 initial
  begin
   clk <=0;
   `simulation_time;
   $finish;
  end

 always
  begin
   #5 clk = ~clk;
  end

endmodule
```

Parameter file:

```
`ifndef PARAMETER_H_
`define PARAMETER_H_
// fpga4student.com
// FPGA projects, VHDL projects, Verilog projects
// Verilog code for RISC Processor
// Parameter file
`define col 16 // 16 bits instruction memory, data memory
`define row_i 15 // instruction memory, instructions number, this number can be ch
`define row_d 8 // The number of data in data memory. We only use 8 data. Do not c
`define filename "./test/50001111_50001212.o"
`define simulation_time #160

`endif
```

All Verilog code needed for the 16-bit RISC processor are provided. Now, you just need to create a

test.data (Initial content of data memory) and test.prog (Intruction memory). Then, run simulation to see how the process works on simulation waveform and memory files.

Example instruction memory file:

```
0000_0100_0000_0000 // load R0 <- Mem(R2 + 0)
0000_0100_0100_0001 // load R1 <- Mem(R2 + 1)
0010_0000_0101_0000 // Add R2 <- R0 + R1
0001_0010_1000_0000 // Store Mem(R1 + 0) <- R2
0011_0000_0101_0000 // sub R2 <- R0 - R1
0100_0000_0101_0000 // invert R2 <- !R0
0101_0000_0101_0000 // logical shift left R2 <- R0<<R1
0110_0000_0101_0000 // logical shift right R2 <- R0>>R1
0111_0000_0101_0000 // AND R2<- R0 AND R1
1000_0000_0101_0000 // OR R2<- R0 OR R1
1001_0000_0101_0000 // SLT R2 <- 1 if R0 < R1
0010_0000_0000_0000 // Add R0 <- R0 + R0
1011_0000_0100_0001 // BEQ branch to jump if R0=R1, PCnew= PC+2+offset<<1 = 28 =>
1100_0000_0100_0000 // BNE branch to jump if R0!=R1, PCnew= PC+2+offset<<1 = 28 =>
1101_0000_0000_0000 // J jump to the beginning address
```

Example data memory file:

```
0000_0000_0000_0001
0000_0000_0000_0010
0000_0000_0000_0001
0000_0000_0000_0010
0000_0000_0000_0001
0000_0000_0000_0010
0000_0000_0000_0001
0000_0000_0000_0010
```

You may like this:

MIPS Processor in VHDL
Verilog code for 16-bit single-cycle MIPS processor
32-bit 5-stage Pipelined MIPS Processor in Verilog (Part-1)
32-bit 5-stage Pipelined MIPS Processor in Verilog (Part-2)
32-bit 5-stage Pipelined MIPS Processor in Verilog (Part-3)

Recommended Verilog projects:

1. **What is an FPGA? How Verilog works on FPGA**
2. Verilog code for FIFO memory
3. Verilog code for 16-bit single-cycle MIPS processor
4. Programmable Digital Delay Timer in Verilog HDL
5. Verilog code for basic logic components in digital circuits
6. Verilog code for 32-bit Unsigned Divider
7. Verilog code for Fixed-Point Matrix Multiplication
8. Plate License Recognition in Verilog HDL
9. Verilog code for Carry-Look-Ahead Multiplier
10. Verilog code for a Microcontroller
11. Verilog code for 4x4 Multiplier
12. Verilog code for Car Parking System
13. Image processing on FPGA using Verilog HDL
14. How to load a text file into FPGA using Verilog HDL
15. Verilog code for Traffic Light Controller
16. Verilog code for Alarm Clock on FPGA
17. Verilog code for comparator design
18. Verilog code for D Flip Flop
19. Verilog code for Full Adder
20. Verilog code for counter with testbench
21. Verilog code for 16-bit RISC Processor
22. Verilog code for button debouncing on FPGA
23. How to write Verilog Testbench for bidirectional/ inout ports

24. Tic Tac Toe Game in Verilog and LogiSim
25. 32-bit 5-stage Pipelined MIPS Processor in Verilog (Part-1)
26. 32-bit 5-stage Pipelined MIPS Processor in Verilog (Part-2)
27. 32-bit 5-stage Pipelined MIPS Processor in Verilog (Part-3)
28. Verilog code for Decoder
29. Verilog code for Multiplexers
30. N-bit Adder Design in Verilog
31. Verilog vs VHDL: Explain by Examples
32. Verilog code for Clock divider on FPGA
33. How to generate a clock enable signal in Verilog
34. Verilog code for PWM Generator
35. Verilog coding vs Software Programming
36. Verilog code for Moore FSM Sequence Detector
37. Verilog code for 7-segment display controller on Basys 3 FPGA

DMCA PROTECTED

Privacy Policy | Disclaimer | Sitemap | Contact | Advertise Here
Copyright © 2016-2020 FPGA4student.com All Rights Reserved.